Round 4 - Sunday, January 31st, 2021

SHOTLINK

Farmers Insurance Open

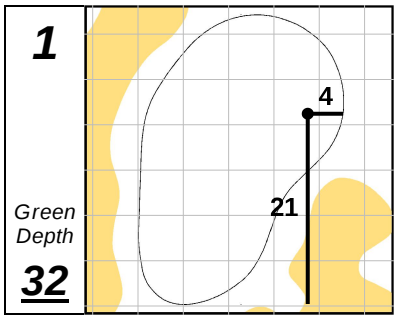

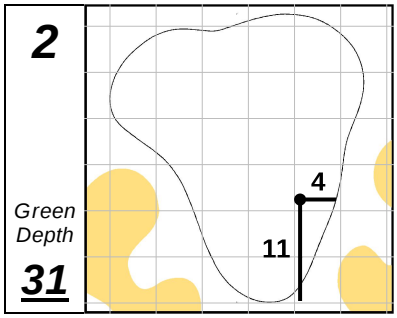

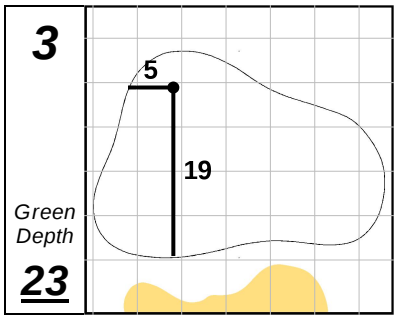

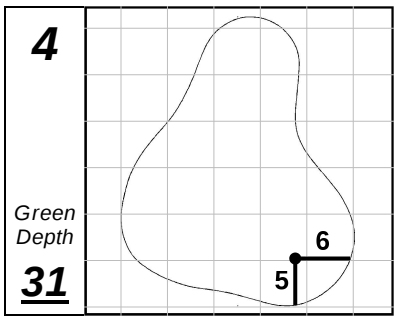

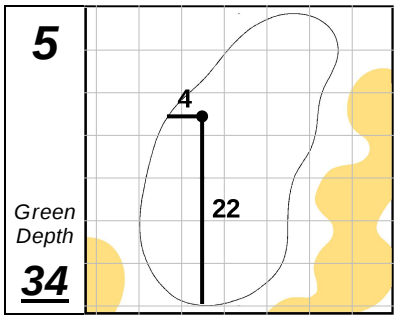

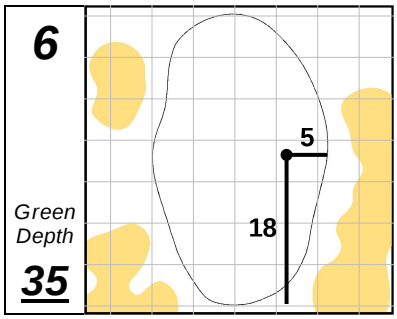

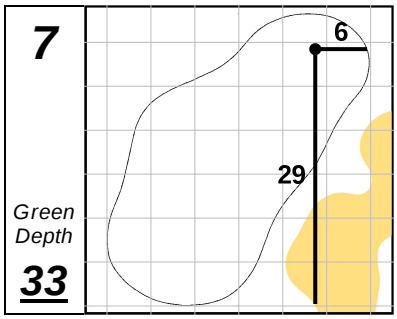

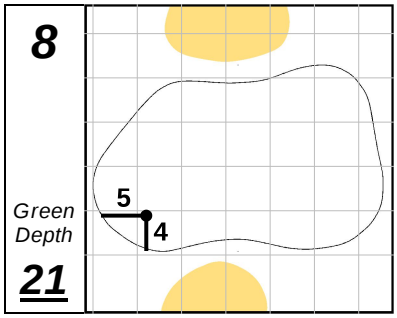

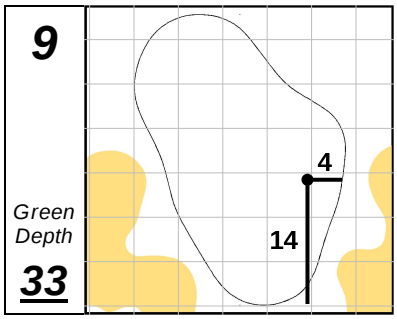

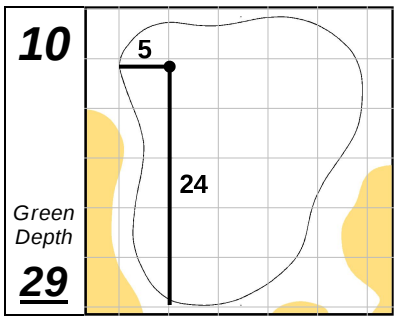

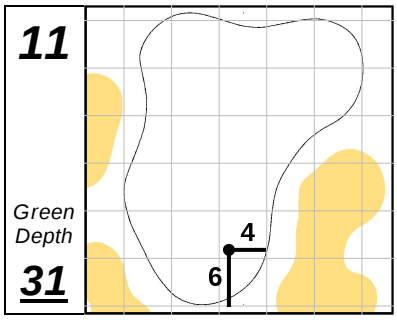

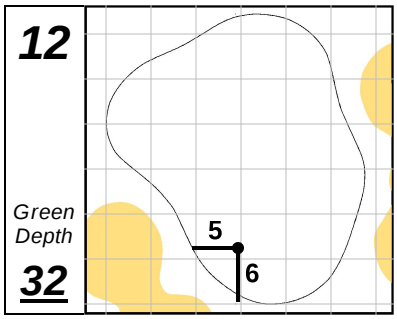

Torrey Pines GC (South)

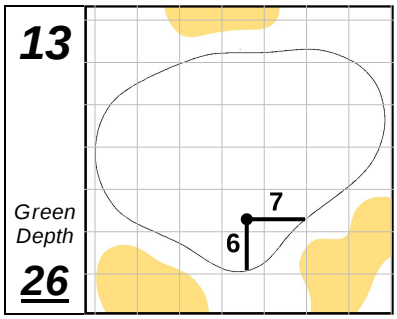

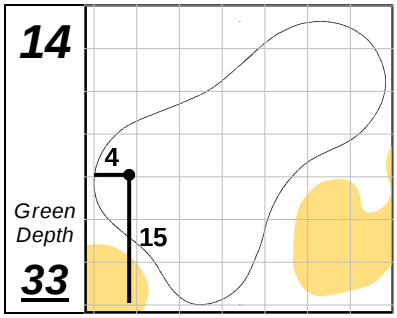

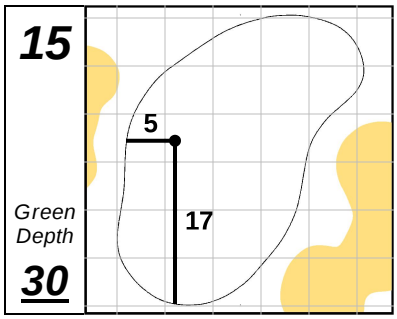

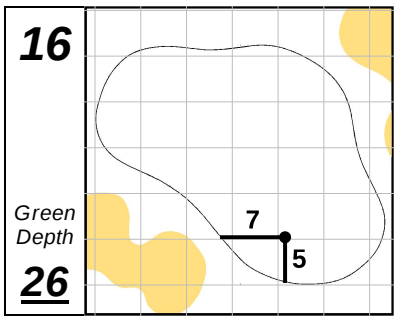

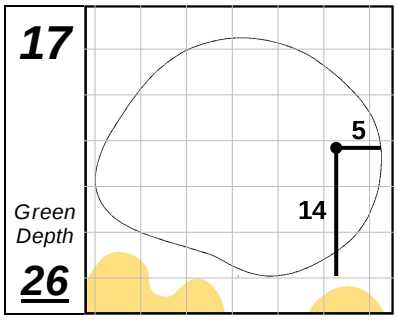

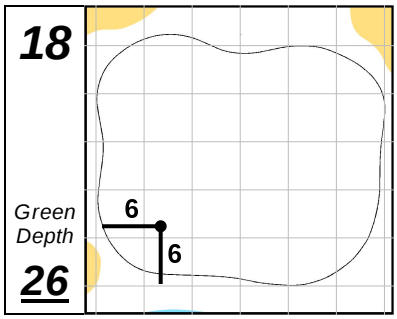

Each side of a complete square on the green represents 5 YARDS.

Saturday, January 30, 2021 8:53 AM